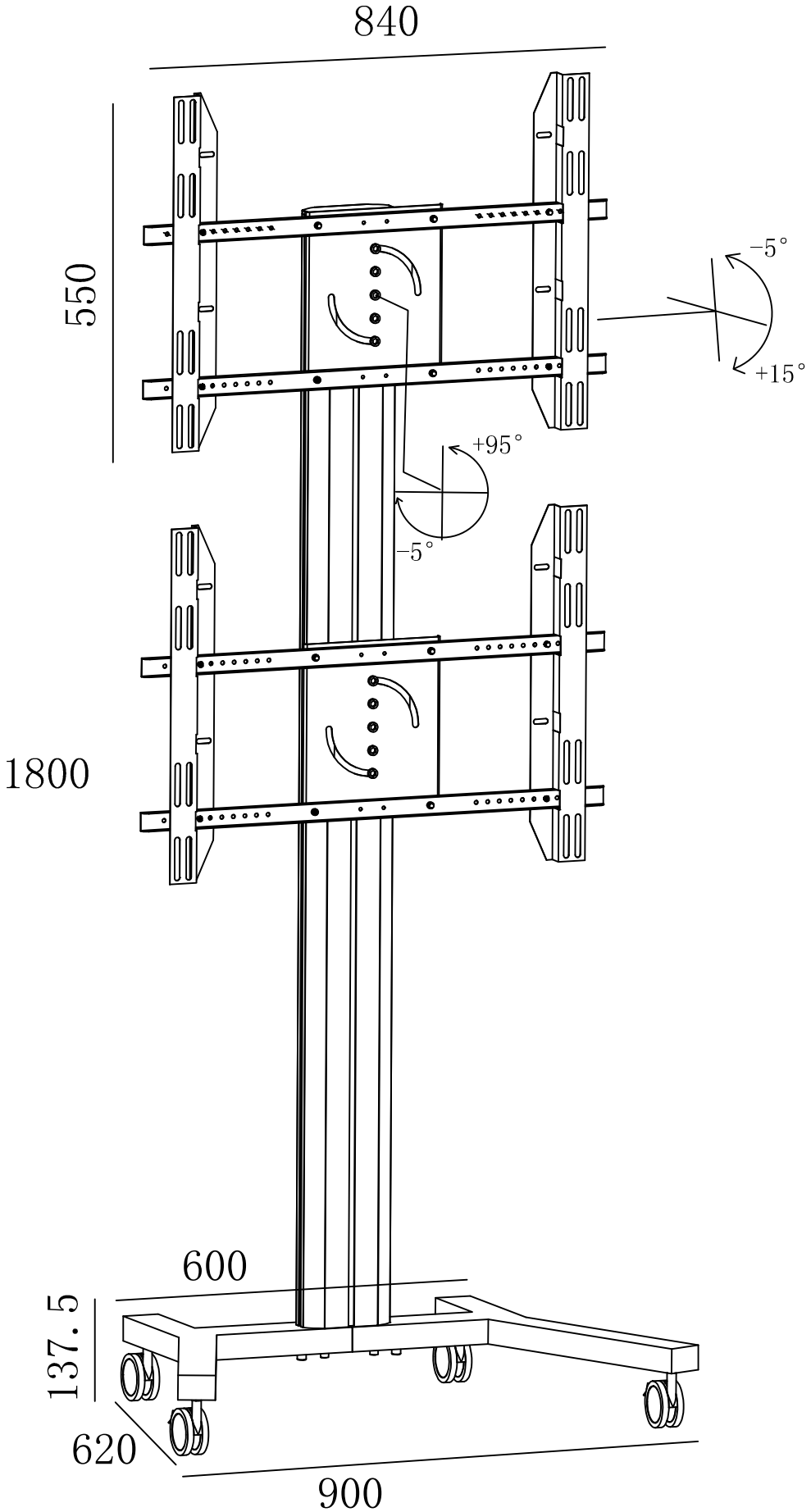
840
550
1800
−5°
+15°
+95°
−5°
600
137.5
620
900